A. H. GREBE & CO.

MODEL Synchrophase SK-4
Early Model
Schematic

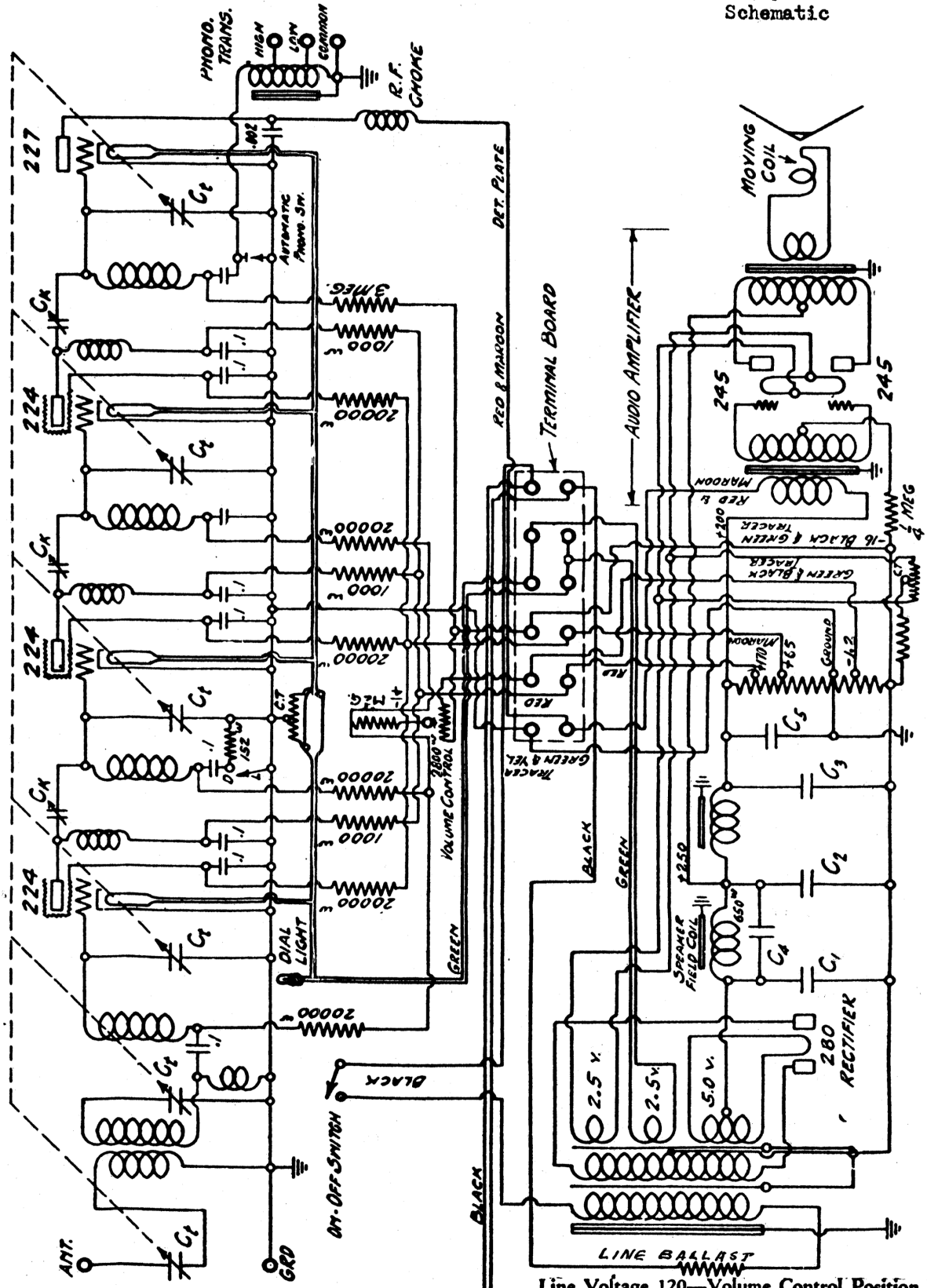

GREBE SYNCHROPHASE SK-4 Early Model

Models Super-synchrophase SK4, 21950, 270, 285, 450, 265

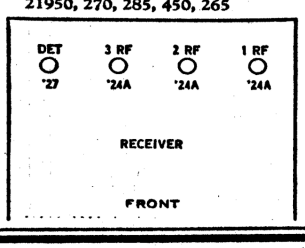

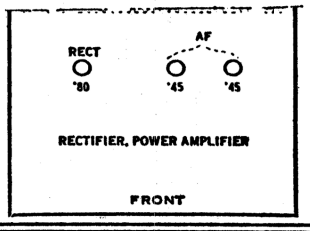

Line Voltage 120—Volume Control Position Min.*
Note: x Resistors in circuit prevent readings.
Note: -*-224 plate current read with volume control at maximum position.

Tube No in Order	Type of Tube	Position of a Tube 1st RF Det etc	Readings Plug in Socket of Set									
			Tube Out		Tube in Tester							
			A Volts	B Volts	A Volts	B Volts	C Volts Control Grid	Cathode-Heater Volts	Normal Plate M A	Plate M A Grid to Pin	Plate Change M A	Screen Grid Volts
1	224	1st RF	2.7	195	2.35	188	14	-	0	2	2	57
2	224	2nd RF	2.7	195	2.35	188	14	-	0	2	2	57
3	224	3rd RF	2.7	195	2.35	188	14	-	0	2	2	57
4	227	Det.	2.7	195	2.35	210	x	-	.8	.8	0	-
5	245	1st AF	2.7	270	2.35	245	x	-	30	34	4	-
6	245	2nd AF	2.7	270	2.35	245	x	-	30	34	4	-
7	280	Rect.	7	-	5.2	-	x	-	90	-	-	-